STERIL-AIRE™, Inc.

11100 E. Artesia Blvd., Cerritos CA 90703
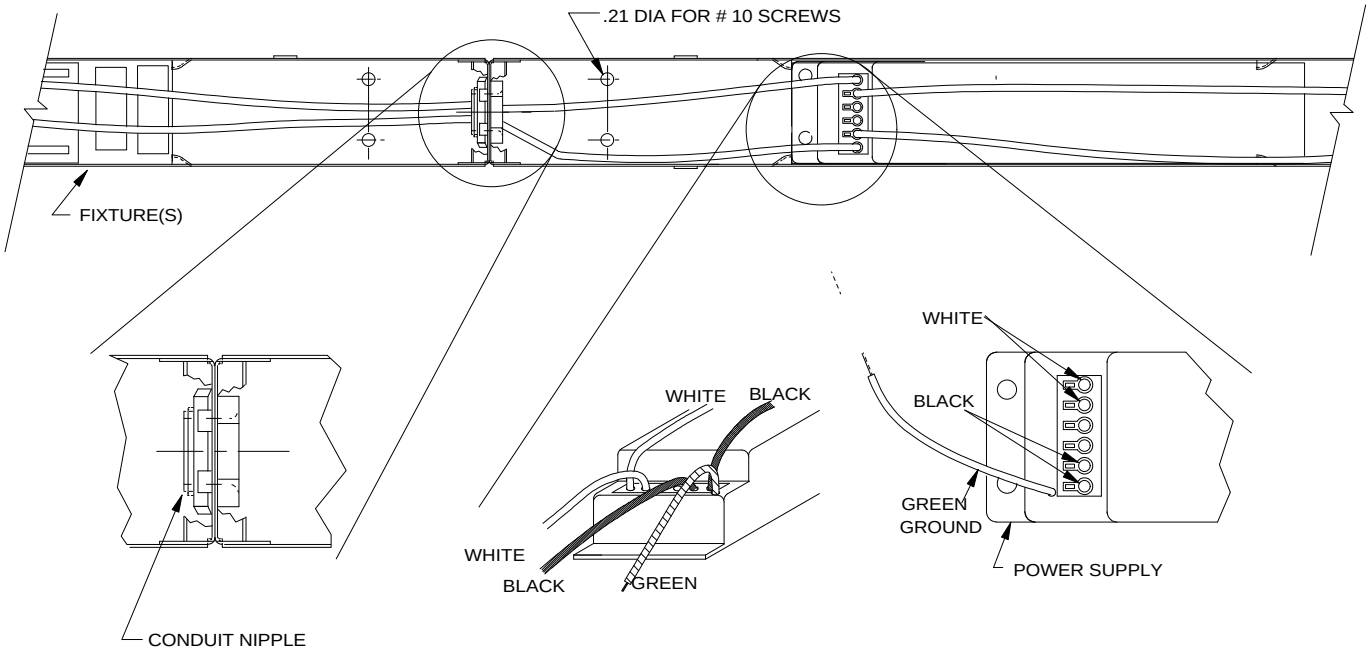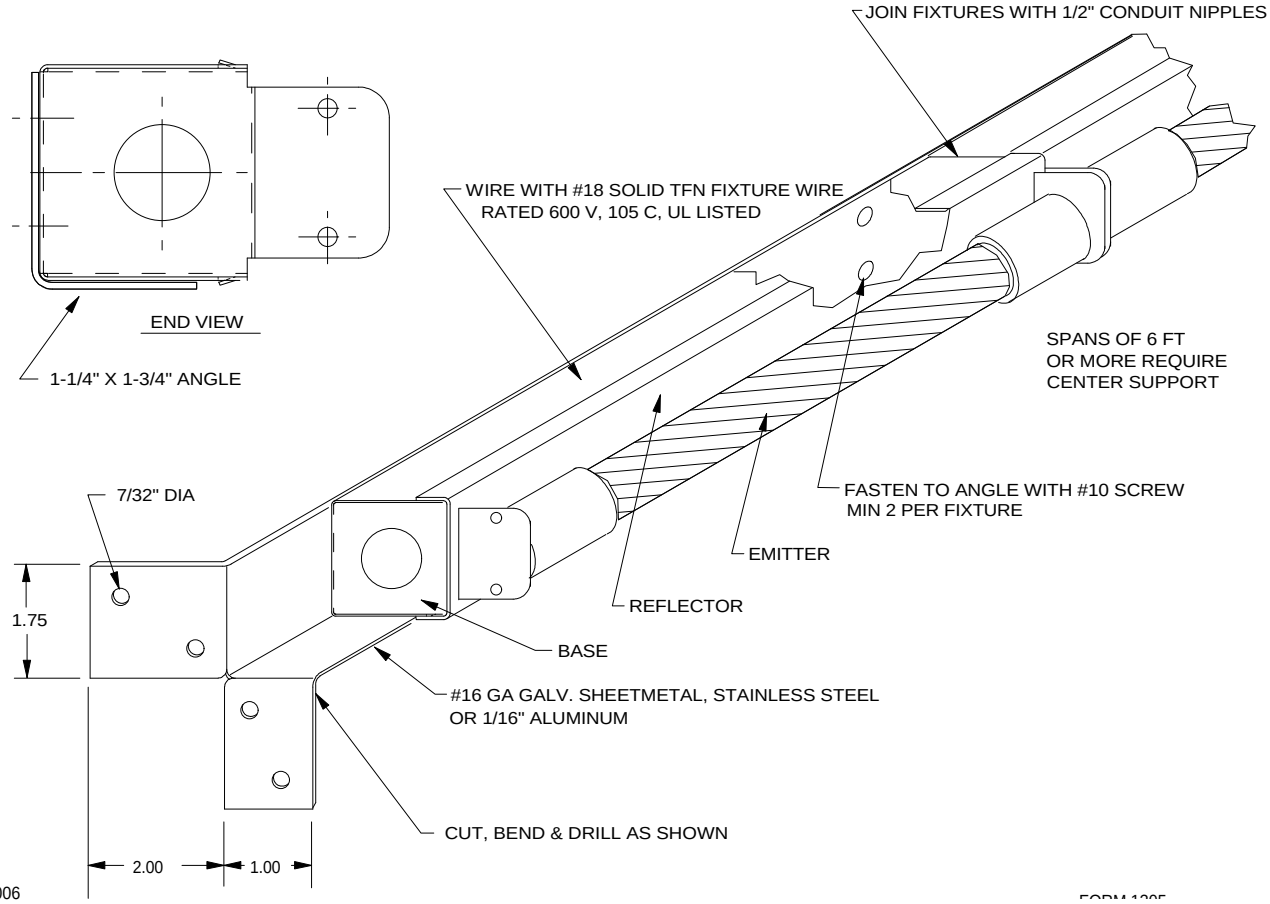
Installation suggestions for DE Banks