YORK®
Heating and Air Conditioning

TECHNICAL GUIDE

SINGLE PIECE AIR HANDLERS

FOR USE WITH SPLIT-SYSTEM COOLING & HEAT PUMPS

MODELS: AHX SERIES

ISO 9001
Certified Quality
Management System

Due to continuous product improvement, specifications are subject to change without notice.

Visit us on the web at www.york.com

Additional rating information can be found at www.ahridirectory.org.

DESCRIPTION

This air handler line offers the ultimate in application flexibility. The AHX (high efficiency motor) models can only be ordered as multi-position. These multi-position model can be installed in downflow, upflow, horizontal right or left except AHX60 two piece model, which is ordered as upflow or horizontal right unit and has to be disengaged, repositioned and reassembled for horizontal left or downflow applications.

All UPG air handlers and coils utilize a field installed TXV to provide our customers with the optimum performance and refrigerant control required for 13 SEER split systems. All air handlers are available with “Flex-coils” without a factory installed metering device. For added flexibility, an R22 or R410A TXV can be field installed to meet your refrigerant choice.

FEATURES

Thermal Expansion Valve - Provides the ultimate refrigerant control required for today’s high efficient product. The UPG field installed bolt-on TXV provides the added flexibility to convert the air handler to the required refrigerant. The UPG TXV is a true bolt-on which does not require brazing to replace or install.

Insulated Cabinet - All air handler cabinets are thermally insulated with 1” foil faced insulation (R-4.2) to prevent sweating. For applications in extreme humidity conditions an optional, field installed, external insulating wrap kit is also available.

Factory Sealed - Achieves 2% or less total airflow leakage rate at duct blaster field test conditions for system airflow verification.

Durable Finish Inside and Out - Air handler casings are made of pre-painted galvanized steel which provides a better paint to steel bond that resists corrosion and rust creep. All internal coil sheet metal parts are made of G90 galvanized.

High Efficiency Blowers - All models use high efficiency brushless DC motors to provide cooling SEER rating enhancement.

4 HK Heat Kit - Installation friendly, easy service, more robust, unique to new design.

Filters - All models have an internal filter rack provided except for the AHX60 which requires an external filter rack.

DIMENSIONS

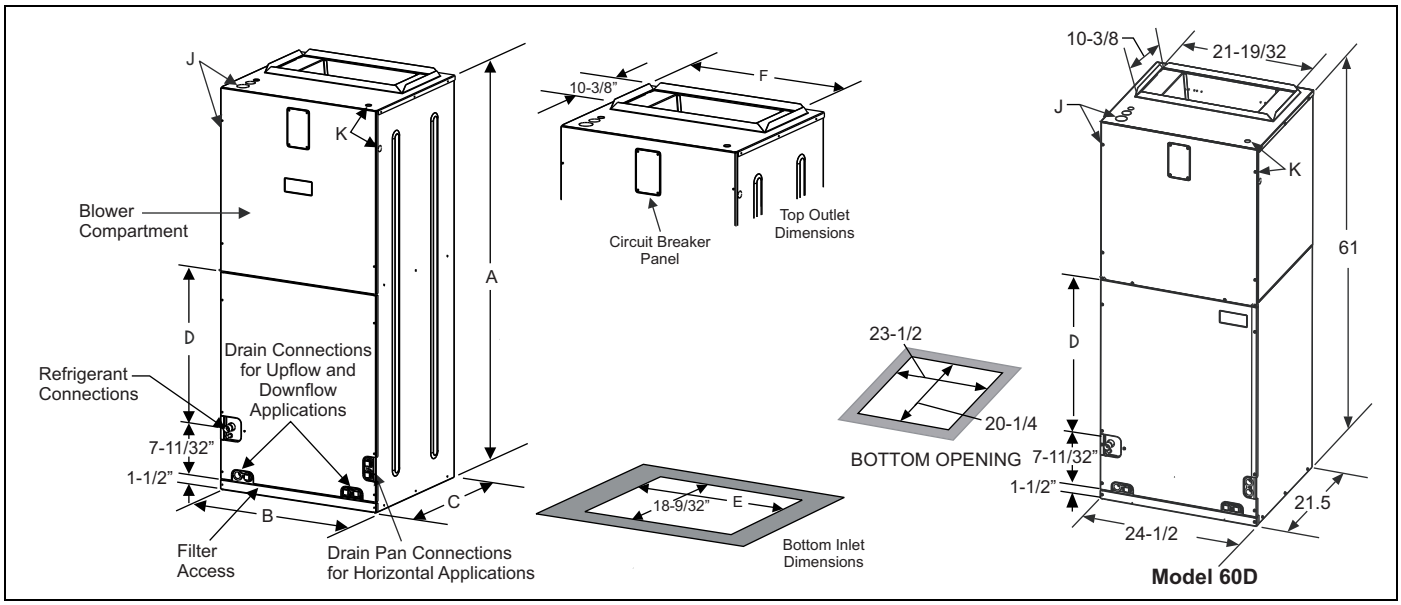

Dimensions

MODELS	Dimensions						Wiring Knockouts[1]		Refrigerant Connections Line Size	
	A	B	C	D	E	F	J	K		
	Height	Width	Depth				Power	Control	Liquid	Vapor
AHX18B3XH21	46”	17-1/2”	21-1/2”	12-3/8”	13-29/32”	14-19/32”	7/8” (1/2”) 1 3/8” (1”) 1 23/32” (1 1/4”)	7/8” (1/2”)	3/8”	3/4”
AHX24B3XH21	46”	17-1/2”		12-3/8”	13-29/32”	14-19/32”	7/8” (1/2”) 1 3/8” (1”) 1 23/32” (1 1/4”)	7/8” (1/2”)	3/8”	3/4”
AHX30B3XH21	46”	17-1/2”		12-3/8”	13-29/32”	14-19/32”	7/8” (1/2”) 1 3/8” (1”) 1 23/32” (1 1/4”)	7/8” (1/2”)	3/8”	3/4”
AHX36C3XH21	52”	21”		17-1/8”	17-13/32”	18-3/32”	7/8” (1/2”) 1 3/8” (1”) 1 23/32” (1 1/4”)	7/8” (1/2”)	3/8”	7/8”
AHX42D3XH21	57”	24-1/2”		22-1/8”	20-29/32”	21-19/32”	7/8” (1/2”) 1 3/8” (1”) 1 23/32” (1 1/4”)	7/8” (1/2”)	3/8”	7/8”
AHX48D3XH21	57”	24-1/2”		22-1/8”	20-29/32”	21-19/32”	7/8” (1/2”) 1 3/8” (1”) 1 23/32” (1 1/4”)	7/8” (1/2”)	3/8”	7/8”
AHX60D3XH21	61”	24-1/2”		26-1/8”	23-1/2”	21-19/32”	7/8” (1/2”) 1 3/8” (1”) 1 23/32” (1 1/4”)	7/8” (1/2”)	3/8”	7/8'

1. Actual size (Conduit size).

COIL TECHNICAL DATA

Models	Application	Refrig. Conn. Types	Face Area (Sq. Ft.)	Rows Deep	Fin Per In.	Coil Size	Tube Geometry	Tube Dia.	Fin Type	TXV
AHX18B3XH21	Cooling / Heat Pump	Sweat	3.40	2	14	(2) 14 x 17.5	1 x 0.866	3/8	Enhanced	Field Installed
AHX24B3XH21	Cooling / Heat Pump	Sweat	3.40	3	12	(2) 14 x 17.5	1 x 0.866	3/8	Enhanced	Field Installed
AHX30B3XH21	Cooling / Heat Pump	Sweat	3.89	3	12	(2) 16 x 17.5	1 x 0.866	3/8	Enhanced	Field Installed
AHX36C3XH21	Cooling / Heat Pump	Sweat	4.86	3	12	(2) 20 x 17.5	1 x 0.866	3/8	Enhanced	Field Installed
AHX42D3XH21	Cooling / Heat Pump	Sweat	5.34	3	12	(2) 22 x 17.5	1 x 0.866	3/8	Enhanced	Field Installed
AHX48D3XH21	Cooling / Heat Pump	Sweat	5.83	3	11	(2) 24 x 17.5	1 x 0.866	3/8	Enhanced	Field Installed
AHX60D3XH21	Cooling / Heat Pump	Sweat	6.81	3	12	(2) 28 x 17.5	1 x 0.866	3/8	Enhanced	Field Installed

Note: H models are available with a factory installed horizontal drain pan.

COOLING CAPACITY

Models	Rated CFM	Entering Air °F (Dry / Wet Bulb)	MBH@ Evaporator Temperature and Corresponding Pressure °F / PSIG			
			35 / 61.5	40 / 68.5	45 / 76.0	50 / 84.0
FULL-CASED "A" TYPE MULTI-POSITION						
AHX18B3XH21	650	85/72	24.5	22.3	19.9	17.3
		80/67	22.6	20.3	18.0	15.6
		75/62	18.5	16.4	14.2	12.0
		70/57	15.0	13.1	10.9	8.5
AHX24B3XH21	800	85/72	35.0	31.8	28.4	24.7
		80/67	32.2	29.1	25.7	22.3
		75/62	26.4	23.4	21.0	17.1
		70/57	21.4	18.6	20.2	12.1
AHX30B3XH21	1000	85/72	41.5	37.8	33.7	29.5
		80/67	36.2	32.4	28.6	24.5
		75/62	29.1	25.3	24.0	19.2
		70/57	24.1	21.5	18.7	15.8
AHX36D3XH21	1200	85/72	51.3	46.7	41.7	36.8
		80/67	41.1	36.3	31.8	27.1
		75/62	32.1	27.0	29.4	21.9
		70/57	27.6	25.4	23.5	18.3
AHX42D3XH21	1400	85/72	88.4	76.0	63.3	50.0
		80/67	70.8	59.4	48.4	37.0
		75/62	55.2	43.9	35.8	29.9
		70/57	47.4	41.5	32.37	25.24
AHX48D3XH21	1600	85/72	100.5	86.4	72.0	56.8
		80/67	80.4	67.5	55.0	42.1
		75/62	62.7	49.9	40.7	34.0
		70/57	53.9	47.2	36.81	28.71
AHX60D3XH21	1850	85/72	119.9	101.0	82.0	62.2
		80/67	96.0	79.2	62.6	45.8
		75/62	74.8	58.6	46.2	37.0
		70/57	64.3	55.4	43.2	33.7

ACCESSORIES

Refer to Price Manual for specific model numbers.

TXV Kits - TXV kits are available for field installation applications or as a service replacement. All kits are bolt-on and require no brazing to install.

Non-Combustible Bases - A combustible floor base accessory is available, if required by local codes, when the air handler is installed in the downflow position on a combustible material.

Electric Heaters - 4HK models shown under electrical data include sequential operation and temperature dual limit switches for safe, efficient operation. Circuit breakers are provided where shown.

External Insulating Wrap Kit - Provides a vinyl covered thermal insulation wrap, providing additional thermal insulation protection to prevent sweating in applications where extreme high humidity is present. Air Handler cover (or wrap) has Velcro edges for easy installation and access.

External Filter Rack - The AHX60 air handler requires an external filter rack to be used, as there are no provision for internally installed filter. For multi-position applications, specify filter rack assembly 1FR0824, which includes a 1" permanent filter. For horizontal applications, use filter rack 1RF0724.

LIMITATIONS

These units must be wired and installed in accordance with all national and local safety codes.

Voltage limits are as follows:

Air Handler Voltage	Voltage code	[1]Normal Operating Voltage Range
208/230-1-60	06	187-253

1. Rated in accordance with ARI Standard 110, utilization range "A".

Airflow must be within the minimum and maximum limits approved for electric heat, evaporator coils and outdoor units.

Entering Air Temperature Limits			
Wet Bulb Temp.°F		Dry Bulb Temp. °F	
Min.	Max.	Min.	Max.
57	72	65	95

AIR FLOW DATA - 60 Hz MODELS

Models	Blower Motor Speed	208 Volt									
		CFM[1] @ External Static Pressure - IWC									
		0.10	0.20	0.30	0.40	0.50	0.60	0.70	0.80	0.90	1.00
AHX18B3XH21†	Med. High/#2	858	842	816	799	767	746	714	703	674	539
	Medium/#3	674	643	624	589	572	546	506	479	431	227
	Med. High/#4	617	582	547	532	490	467	412	360	306	220
	Low/#5	586	487	448	422	373	306	274	220	190	171
AHX24B3XH21†	Med. High/#2	854	814	781	738	691	615	575	520	479	440
	Medium/#3	679	593	533	462	423	370	319	297	228	197
	Med. Low/#4	648	509	442	380	311	293	224	183	151	125
	Low/#5	624	432	296	255	197	143	102	N/A	N/A	N/A
AHX30B3XH21	High/#1	1081	1045	1015	979	941	906	852	784	737	691
	Med. High/#2	860	828	784	747	683	619	570	526	480	453
	Medium/#3	692	600	528	464	427	371	324	297	222	188
	Med. Low/#4	665	507	441	381	322	299	223	182	161	125
	Low/#5	644	455	294	262	198	143	105	N/A	N/A	N/A
AHX36C3XH21	High/#1	1245	1213	1172	1138	1106	1058	1011	943	852	794
	Med. High/#2	1053	1012	977	928	889	824	742	682	651	581
	Medium/#3	873	765	720	620	562	502	462	425	382	332
	Med. Low/#4	783	589	248	198	165	104	N/A	N/A	N/A	N/A
	Low/#5	715	431	127	N/A	N/A	N/A	N/A	N/A	N/A	N/A
AHX42D3XH21	High/#1	1450	1412	1372	1338	1299	1255	1214	1170	1112	1058
	Med. High/#2	1251	1204	1171	1137	1086	1044	998	939	857	765
	Medium/#3	1055	1017	969	929	866	817	732	653	590	537
	Med. Low/#4	900	732	428	357	299	262	212	167	139	41
	Low/#5	846	665	253	N/A	N/A	N/A	N/A	N/A	N/A	N/A
AHX48D3XH21	High/#1	1680	1647	1609	1570	1527	1489	1442	1407	1360	1295
	Med. High/#2	1474	1437	1400	1354	1315	1284	1239	1198	1152	1103
	Medium/#3	1299	1259	1214	1181	1133	1096	1051	994	936	819
	Med. Low/#4	1135	1081	1034	982	940	894	816	709	671	604
	Low/#5	1009	873	813	758	651	592	514	485	433	400
AHX60D3XH21	High/#1	1918	1886	1852	1815	1783	1747	1712	1675	1631	1581
	Med. High/#2	1675	1640	1605	1566	1533	1500	1463	1422	1372	1342
	Medium/#3	1463	1432	1393	1352	1315	1279	1245	1189	1148	1095
	Med. Low/#4	1255	1181	1140	1100	1054	1004	948	869	798	759
	Low/#5	1124	1093	1049	996	952	897	819	754	689	631

NOTE: Air flow data shown above 1/2" w.c. external static pressure is for REFERENCE ONLY. Maximum allowable external static when electric heat is used is limited to 1/2" w.c. Maximum allowable external static pressure may also be limited by minimum CFM requirements for proper Heat Pump operation.

1. Dry coil conditions only, tested without filters.

†Speed temp High #1 not recommended for the unit.

Air handler units are UL Listed up to 0.5" w.c. external static pressure, including air filter, wet coil, and largest kW size heater, unless otherwise noted.

AIR FLOW DATA - 60 Hz MODELS

Models	Blower Motor Speed	230 Volt									
		CFM[1] @ External Static Pressure - IWC									
		0.10	0.20	0.30	0.40	0.50	0.60	0.70	0.80	0.90	1.00
AHX18B3XH21†	Med. High/#2	871	856	829	812	785	762	737	725	700	652
	Medium/#3	687	656	636	599	572	556	519	496	451	426
	Med. Low/#4	618	584	547	534	498	480	433	410	334	221
	Low/#5	574	486	444	422	374	317	277	223	216	192
AHX24B3XH21†	Med. High/#2	817	794	767	727	682	636	588	538	509	475
	Medium/#3	620	598	537	486	440	388	368	307	289	N/A
	Med. Low/#4	629	510	451	393	362	265	265	209	196	146
	Low/#5	572	394	310	279	207	181	154	120	N/A	N/A
AHX30B3XH21	High/#1	1057	1026	1002	973	944	891	853	780	752	674
	Med. High/#2	841	811	783	737	678	626	593	535	519	477
	Medium/#3	653	613	513	473	443	393	261	303	N/A	N/A
	Med. Low/#4	628	507	449	399	361	315	220	227	199	176
	Low/#5	622	440	321	280	203	178	163	121	N/A	N/A
AHX36C3XH21	High/#1	1263	1235	1200	1158	1105	1078	1030	983	882	805
	Med. High/#2	1059	1019	982	938	892	829	753	692	646	600
	Medium/#3	904	784	726	612	545	506	480	428	376	340
	Med. Low/#4	800	654	228	189	167	107	N/A	N/A	N/A	N/A
	Low/#5	747	557	166	N/A	N/A	N/A	N/A	N/A	N/A	N/A
AHX42D3XH21	High/#1	1441	1407	1364	1329	1295	1255	1214	1175	1135	1085
	Med. High/#2	1238	1199	1151	1118	1080	1030	992	949	863	778
	Medium/#3	1051	1008	948	908	863	799	714	669	595	565
	Med. Low/#4	927	761	418	342	311	228	217	187	136	N/A
	Low/#5	887	687	259	N/A	N/A	N/A	N/A	N/A	N/A	N/A
AHX48D3XH21	High/#1	1731	1688	1645	1604	1560	1518	1479	1441	1380	1283
	Med. High/#2	1501	1458	1415	1380	1337	1295	1257	1218	1156	1105
	Medium/#3	1314	1273	1224	1180	1141	1088	1045	992	999	913
	Med. Low/#4	1151	1090	1057	1008	971	921	860	767	705	632
	Low/#5	1010	894	834	770	715	620	535	515	470	441
AHX60D3XH21	High/#1	1908	1881	1848	1816	1781	1746	1718	1684	1638	1566
	Med. High/#2	1666	1636	1608	1570	1534	1503	1468	1436	1398	1362
	Medium/#3	1448	1428	1393	1345	1313	1279	1241	1115	1161	1110
	Med. Low/#4	1210	1172	1134	1077	1051	1001	956	895	795	759
	Low/#5	1122	1082	1040	992	943	890	832	751	704	655

NOTE: Air flow data shown above 1/2" w.c. external static pressure is for REFERENCE ONLY. Maximum allowable external static when electric heat is used is limited to 1/2" w.c. Maximum allowable external static pressure may also be limited by minimum CFM requirements for proper Heat Pump operation.

1. Dry coil conditions, tested without filters.

† Speed tap High #1 not recommended for the unit.

All air handler units are UL Listed up to 0.50" w.c. external static pressure, including air filter, wet coil, and largest KW size heater, unless otherwise noted.

APPLICATION FACTORS - RATED CFM VS. ACTUAL CFM

% Of Rated Airflow	80%	90%	Rated CFM	110%	120%
Capacity Factor	0.96	0.98	1.00	1.02	1.03

PHYSICAL & ELECTRICAL DATA

Models		AHX18B3XH21	AHX24B3XH21	AHX30B3XH21	AHX36C3XH21
Blower - Diameter x Width		9 x 6	10 x 9	10 x 9	10 x 10
Motor	HP	1/3 HP	1/3 HP	1/3 HP	1/3 HP
	Nominal RPM	1050	1050	1050	1050
Voltage		230			
Amps	Full Load (230)	2.8	2.8	2.8	2.8
Filter[1]	Type	DISPOSABLE OR PERMANENT			
	Size	16 x 20 x 1	16 x 20 x 1	16 x 20 x 1	20 x 20 x 1
	Permanent Type Kit	1PF0601BK	1PF0601BK	1PF0601BK	1PF0602BK
Shipping / Operating Weight (lbs.) - N Models		128/122	132/126	139/133	162/156
Shipping / Operating Weight (lbs.) - H Models		131/125	139/133	142/136	165/159

Models		AHX42D3XH21	AHX48D3XH21	AHX60D3XH21[2]
Blower - Diameter x Width		10 x 10	10 x 10	11 x 10
Motor	HP	1/2 HP	1/2 HP	3/4 HP
	Nominal RPM	1050	1050	1050
Voltage		230		
Amps	Full Load (230)	4.1	4.1	6.0
Filter[1]	Type	DISPOSABLE OR PERMANENT		
	Size	22 x 20 x 1	22 x 20 x 1	24 x 20 x 1
	Permanent Type Kit	1PF0603BK	1PF0603BK	1PF0604BK
Shipping / Operating Weight (lbs.) - H Models		187/176	190/179	203/192

1. Field Supplied.
2. Model 60D uses external filter.

ELECTRICAL DATA - COOLING ONLY (60 Hz)

Models	Total Motor Amps		Minimum Circuit Ampacity		Max. O.C.P.[1] Amps/Type	Minimum Wire Size A.W.G.
	60 Hertz		60 Hertz			
	208V	230V	208V	230V		
AHX18B3XH21	2.8	2.8	3.5	3.5	15	14
AHX24B3XH21	2.8	2.8	3.5	3.5	15	14
AHX30B3XH21	2.8	2.8	3.5	3.5	15	14
AHX36C3XH21	2.8	2.8	3.5	3.5	15	14
AHX42D3XH21	4.1	4.1	5.2	5.2	15	14
AHX48D3XH21	4.1	4.1	5.2	5.2	15	14
AHX60D3XH21	6.0	6.0	7.5	7.5	15	14

1. OCP = Over Current Protection device, must be HACR type Circuit Breaker or Time Delay fuse.

ELECTRICAL DATA - 208/230-1-60

Models	Heater Models*	Max. Static	Min. Speed Tap	Total Heat[1]				kW Staging					
				kW		MBH		W1 Only		W2 Only		W1 + W2	
				208V	240V	208V	240V	208V	240V	208V	240V	208V	240V
AHX18B3XH21	4HK*6500206	0.5	Med. Low/#4	1.9	2.5	6.4	8.5	1.9	2.5	1.9	2.5	1.9	2.5
	4HK*6500506	0.5	Med. Low/#4	3.6	4.8	12.3	16.4	3.6	4.8	3.6	4.8	3.6	4.8
	4HK*6500806	0.5	Med. High/#2	5.6	7.5	19.2	25.6	2.8	3.75	5.6	7.5	5.6	7.5
AHX24B3XH21	4HK*6500206	0.5	Med. Low/#4	1.9	2.5	6.4	8.5	1.9	2.5	1.9	2.5	1.9	2.5
	4HK*6500506	0.5	Med. Low/#4	3.6	4.8	12.3	16.4	3.6	4.8	3.6	4.8	3.6	4.8
	4HK*6500806	0.5	Med. High/#2	5.6	7.5	19.2	25.6	2.8	3.75	5.6	7.5	5.6	7.5
	4HK*6501006	0.5	Med. High/#2	7.2	9.6	24.6	32.8	3.6	4.8	7.2	9.6	7.2	9.6
	4HK16501306	0.5	Med. High/#2	9.8	13	33.3	44.4	3.3	4.3	6.5	8.6	9.8	13
AHX30B3XH21	4HK*6500506	0.5	Med. Low/#4	3.6	4.8	12.3	16.4	3.6	4.8	3.6	4.8	3.6	4.8
	4HK*6500806	0.5	Med. High/#2	5.6	7.5	19.2	25.6	2.8	3.75	5.6	7.5	5.6	7.5
	4HK*6501006	0.5	Med. High/#2	7.2	9.6	24.6	32.8	3.6	4.8	7.2	9.6	7.2	9.6
	4HK16501306	0.5	Med. High/#2	9.8	13	33.3	44.4	3.3	4.3	6.5	8.6	9.8	13
	4HK165N1506	0.5	High/#1	10.8	14.4	36.9	49.1	3.6	4.8	7.2	9.6	10.8	14.4
AHX36C3XH21	4HK*6500506	0.5	Med. High/#2	3.6	4.8	12.3	16.4	3.6	4.8	3.6	4.8	3.6	4.8
	4HK*6500806	0.5	High/#1	5.6	7.5	19.2	25.6	2.8	3.75	5.6	7.5	5.6	7.5
	4HK*6501006	0.5	High/#1	7.2	9.6	24.6	32.8	3.6	4.8	7.2	9.6	7.2	9.6
	4HK16501506	0.5	High/#1	10.8	14.4	36.9	49.1	3.6	4.8	7.2	9.6	10.8	14.4
AHX42D3XH21	4HK*6500506	0.5	High/#1	3.6	4.8	12.3	16.4	3.6	4.8	3.6	4.8	3.6	4.8
	4HK*6500806	0.5	High/#1	5.6	7.5	19.2	25.6	2.8	3.75	2.8	7.5	5.6	7.5
	4HK*6501006	0.5	High/#1	7.2	9.6	24.6	32.8	3.6	4.8	7.2	9.6	7.2	9.6
	4HK16501506	0.5	High/#1	10.8	14.4	36.9	49.1	3.6	4.8	7.2	9.6	10.8	14.4
AHX48D3XH21	4HK*6500506	0.5	Medium/#3	3.6	4.8	12.3	16.4	3.6	4.8	3.6	4.8	3.6	4.8
	4HK*6500806	0.5	Medium/#3	5.6	7.5	19.2	25.6	2.8	3.75	2.8	7.5	5.6	7.5
	4HK*6501006	0.5	Med. High/#2	7.2	9.6	24.6	32.8	3.6	4.8	7.2	9.6	7.2	9.6
	4HK16501506	0.5	Med. High/#2	10.8	14.4	36.9	49.1	3.6	4.8	7.2	9.6	10.8	14.4
	4HK16501806	0.5	High/#1	13.2	17.6	45.1	60.1	3.3	4.4	6.6	8.8	13.2	17.6
	4HK16502006	0.5	High/#1	14.4	19.2	49.2	65.5	3.6	4.8	7.2	9.6	14.4	19.2
AHX60D3XH21	4HK*6500506	0.5	Med. Low/#4	3.6	4.8	12.3	16.4	3.6	4.8	3.6	4.8	3.6	4.8
	4HK*6500806	0.5	Med. Low/#4	5.6	7.5	19.2	25.6	2.8	3.75	2.8	7.5	5.6	7.5
	4HK*6501006	0.5	Medium/#3	7.2	9.6	24.6	32.8	3.6	4.8	7.2	9.6	7.2	9.6
	4HK16501506	0.5	Medium/#3	10.8	14.4	36.9	49.1	3.6	4.8	7.2	9.6	10.8	14.4
	4HK16501806	0.5	Med. High/#2	13.2	17.6	45.1	60.1	3.3	4.4	6.6	8.8	13.2	17.6
	4HK16502006	0.5	Med. High/#2	14.4	19.2	49.2	65.5	3.6	4.8	7.2	9.6	14.4	19.2
	4HK16502506	0.5	High/#1	18	24	61.5	81.9	3.6	4.8	10.8	14.4	18	24

1. See conversion Table 8.
* May be 0 (no breaker) or 1 (with breaker).

kW & MBH CONVERSIONS - FOR TOTAL POWER INPUT REQUIREMENT

FOR	208V	OPERATION MULTIPLY	240V	TABULATED kW & MBH BY	.751
	230V		240V		.918

ELECTRICAL DATA (FOR SINGLE SOURCE POWER SUPPLY) - COPPER WIRE 208/230-1-60

Models	Heater Models*	Heater Amps 240V	Field Wiring					
			Min. Circuit Ampacity		Max. O.C.P.[1] Amps/Type		75°C Wire Size - AWG	
			208V	240V	208V	240V	208V	240V
AHX18B3XH21	4HK*6500206	10.4	14.8	16.5	15	20	12	12
	4HK*6500506	20.0	25.2	28.5	30	30	10	10
	4HK*6500806	31.3	37.4	42.6	40	45	8	8
AHX24B3XH21	4HK*6500206	10.4	14.8	16.5	15	20	12	12
	4HK*6500506	20.0	25.2	28.5	30	30	10	10
	4HK*6500806	31.3	37.4	42.6	40	45	8	8
	4HK*6501006	40.0	46.8	53.5	50	60	8	6
	4HK16501306	54.2	62.2	71.3	70	80	4	4
AHX30B3XH21	4HK*6500506	20.0	25.2	28.5	30	30	10	10
	4HK*6500806	31.3	37.4	42.6	40	45	8	8
	4HK*6501006	40.0	46.8	53.5	50	60	8	6
	4HK16501306	54.2	62.1	71.3	70	80	4	3
	4HK165N1506	60.0	68.5	78.6	70	80	4	3
AHX36C3XH21	4HK*6500506	20.0	25.2	28.5	30	30	10	10
	4HK*6500806	31.3	37.4	42.6	40	45	8	8
	4HK*6501006	40.0	46.8	53.5	50	60	8	6
	4HK16501506	60.0	68.5	78.5	70	80	4	3
AHX42D3XH21	4HK*6500506	20.0	26.8	30.1	30	35	8	8
	4HK*6500806	31.3	39.0	44.2	40	45	8	8
	4HK*6501006	40.0	48.4	55.1	50	60	6	6
	4HK16501506	60.0	70.1	80.1	80	90	3	3
AHX48D3XH21	4HK*6500506	20.0	26.8	30.1	30	35	10	10
	4HK*6500806	31.3	39.0	44.2	40	45	8	8
	4HK*6501006	40.0	48.4	55.1	50	60	8	6
	4HK16501506	60.0	70.1	80.1	80	90	3	3
	4HK16501806	73.3	84.5	96.7	90	100	3	3
	4HK16502006	80.0	91.8	105.1	100	110	3	2
AHX60D3XH21	4HK*6500506	20.0	29.2	32.5	30	35	8	8
	4HK*6500806	31.3	41.1	46.6	45	50	8	8
	4HK*6501006	40.0	50.8	57.5	60	60	6	6
	4HK16501506	60.0	72.5	82.5	80	90	3	3
	4HK16501806	73.3	86.9	99.1	90	110	3	2
	4HK16502006	80.0	94.2	107.5	100	125	3	1
	4HK16502506	100.0	115.8	132.5	125	150	1	1/0

1. O.C.P. = Over Current Protection device, must be HACR type Circuit Breaker or Time Delay fuse.
* May be 0 (no breaker) or 1 (with breaker).

ELECTRICAL DATA (FOR MULTI SOURCE POWER SUPPLY) - COPPER WIRE 208/230-1-60

Models	Heater Models	Min. Circuit Ampacity			Max. O.C.P.[1] Amps/Type			75°C Wire Size - AWG		
		Circuit			Circuit			Circuit		
		1st	2nd	3rd	1st	2nd	3rd	1st	2nd	3rd
		208/240	208/240	208/240	208/240	208/240	208/240	208/240	208/240	208/240
AHX24B3XH21	4HK16501306	42.7/48.6	19.5/22.5	–	45/50	20/25	–	8/8	10/10	–
AHX30B3XH21	4HK16501306	42.6/48.7	19.5/22.5	–	45/50	20/25	–	8/8	10/10	–
	4HK165N1506	46.8/53.6	21.7/25.0	–	50/60	25/25	–	8/6	10/10	–
AHX36C3XH21	4HK16501506	46.9/53.5	21.7/25.0	–	50/60	25/25	–	8/6	10/10	–
AHX42D3XH21	4HK16501506	48.5/55.2	21.7/25.0	–	50/60	25/25	–	8/6	10/10	–
AHX48D3XH21	4HK16501506	48.5/55.2	21.7/25.0	–	50/60	25/25	–	8/6	10/10	–
	4HK16501806	44.9/51.0	39.8/45.8	–	45/60	40/50	–	8/6	8/8	–
	4HK16502006	48.5/55.2	43.4/50.0	–	50/60	45/50	–	8/6	8/8	–
AHX60D3XH21	4HK16501506	51.5/58.0	21.7/25.0	–	60/60	25/25	–	8/6	10/10	–
	4HK16501806	47.5/54.0	39.8/45.8	–	50/60	1	–	6/6	8/6	–
	4HK16502006	51.5/58.0	43.4/50.0	–	60/60	45/50	–	6/6	8/6	–
	4HK16502506	51.5/58.0	43.4/50.0	21.68/25.00	60/60	45/50	25/25	6/6	8/6	10/10

1. O.C.P. = Over Current Protection device, must be HACR type Circuit Breaker or Time Delay fuse.

ELECTRICAL DATA - 208/230-3-60

Models	Heat Kit - Three Phase	Max. Static	Min. Speed Tap	Total Heat[1]				KW Staging					
				KW		MBH		W1 Only		W2 Only		W1 + W2	
				208V	240V	208V	240V	208V	240V	208V	240V	208V	240V
AXH24B3XH21	4HK06501025	0.5	Med. High/#2	7.2	9.6	24.6	32.8	7.2	9.6	7.2	9.6	7.2	9.6
AHX30B3XH21	4HK06501025	0.5	Med. High/#2	7.2	9.6	24.6	32.8	7.2	9.6	7.2	9.6	7.2	9.6
	4HK065N1525	0.5	High/#1	10.8	14.4	36.9	49.1	10.8	14.4	10.8	14.4	10.8	14.4
AHX36C3XH21	4HK06501025	0.5	High/#1	7.2	9.6	24.6	32.8	7.2	9.6	7.2	9.6	7.2	9.6
	4HK06501525	0.5	High/#1	10.8	14.4	36.9	49.1	10.8	14.4	10.8	14.4	10.8	14.4
AHX42D3XH21	4HK06501025	0.5	High/#1	7.2	9.6	24.6	32.8	7.2	9.6	7.2	9.6	7.2	9.6
	4HK06501525	0.5	High/#1	10.8	14.4	36.9	49.1	10.8	14.4	10.8	14.4	10.8	14.4
AHX48D3XH21	4HK06501025	0.5	Med. High/#2	7.2	9.6	24.6	32.8	7.2	9.6	7.2	9.6	7.2	9.6
	4HK06501525	0.5	Med. High/#2	10.8	14.4	36.9	49.1	10.8	14.4	10.8	14.4	10.8	14.4
	4HK06501825	0.5	High/#1	12.9	17.2	44.7	58.7	12.9	17.2	12.9	17.2	12.9	17.2
AHX60D3XH21	4HK06501025	0.5	Medium/#3	7.2	9.6	24.6	32.8	7.2	9.6	7.2	9.6	7.2	9.6
	4HK06501525	0.5	Medium/#3	10.8	14.4	36.9	49.1	10.8	14.4	10.8	14.4	10.8	14.4
	4HK16501825	0.5	Med. High/#2	12.9	17.2	44.7	58.7	12.9	17.2	12.9	17.2	12.9	17.2
	4HK16502525	0.5	High/#1	18	24	61.4	81.4	9	12	18	24	18	24

1. See conversion Table 8.

ELECTRICAL DATA (FOR SINGLE SOURCE POWER SUPPLY) - COPPER WIRE 208/230-3-60

Models	Heat Kit - Three Phase	Heater Amps 240V	Field Wiring					
			Min. Circuit Ampacity		Max. O.C.P.[1] Amps/Type		75°C Wire Size - AWG	
			208V	240V	208V	240V	208V	240V
AHX24B3XH21	4HK06501025	23.1	28.9	32.9	30	35	10	8
AHX30B3XH21	4HK06501025	23.1	27.8	31.6	30	35	10	8
	4HK065N1525	34.7	41.0	46.9	45	50	8	8
AHX36C3XH21	4HK06501025	23.1	26.9	30.6	30	35	10	8
	4HK06501525	34.7	39.4	45.1	40	50	8	8
AHX42D3XH21	4HK06501025	23.1	30.2	34.0	35	35	10	8
	4HK06501525	34.7	42.7	48.5	45	50	8	8
AHX48D3XH21	4HK06501025	23.1	30.2	34.0	35	35	10	8
	4HK06501525	34.7	42.7	48.5	45	50	8	8
	4HK06501825	41.4	48.8	56.9	50	60	8	6
AHX60D3XH21	4HK06501025	23.1	35.3	39.1	40	40	8	8
	4HK06501525	34.7	45.0	53.6	45	60	8	6

1. O.C.P. = Over Current Protection device, must be HACR type Circuit Breaker or Time Delay fuse.
2. Heaters are 3 Phase.

ELECTRICAL DATA (FOR MULTI SOURCE POWER SUPPLY) - COPPER WIRE 208/230-3-60

Models	Heater Model	Minimum Circuit Ampacity			Max. O.C.P.[1] Amps/Type			75°C Wire Size - AWG		
		Circuit								
		1st	2nd	3rd	1st	2nd	3rd	1st	2nd	3rd
		208/240	208/240	208/240	208/240	208/240	208/240	208/240	208/240	208/240
AHX60D3XH21	4HK16501825	32.5/36.0	22.4/25.9	–/–	35/40	25/30	–/–	8/8	10/10	–/–
	4HK16502525	41.5/46.0	25.0/28.9	–/–	45/50	35/40	–/–	8/8	8/8	–/–

1. O.C.P. = Over Current Protection device, must be HACR type Circuit Breaker or Time Delay fuse.

COOLING MODELS WITH ELECTRIC HEAT WIRING

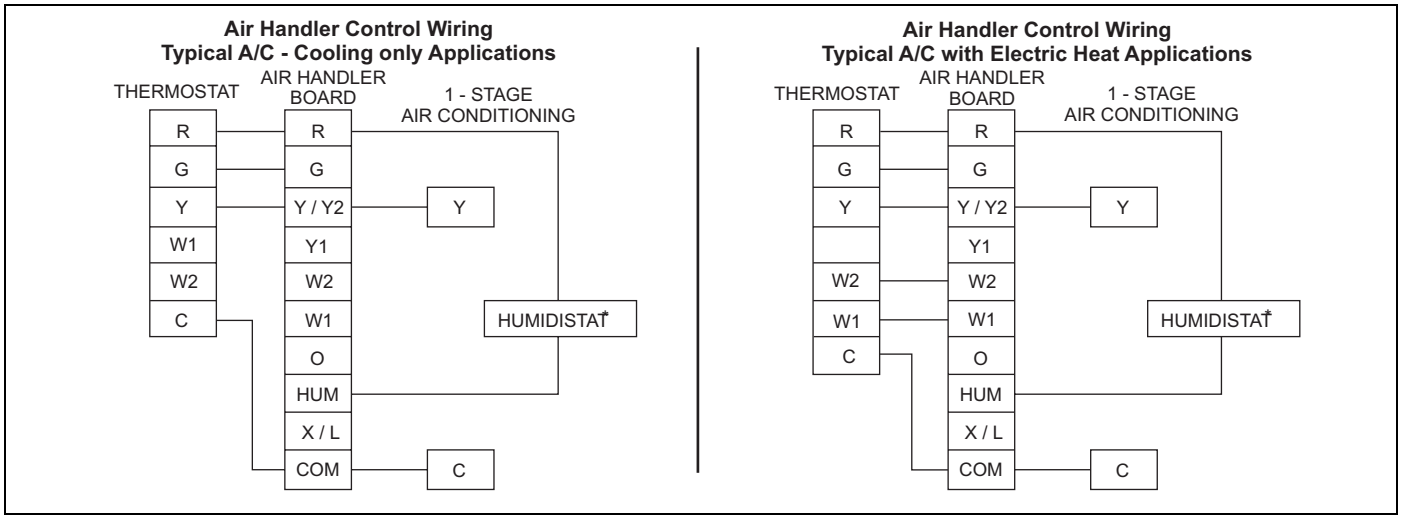

* Optional dehumidification humidistat switch contacts open on humidity rise.

Notes:
1. "Y" Terminal on Air Handler Control Board must be connected for full CFM and applications requiring 60 second blower off delay for SEER enhancement.
2. Move HUM STAT Jumper on AH Control Board to YES position if Humidistat is used.
3. MODE Jumper on AH control board should be set to A/C for air conditioners.

SINGLE-STAGE COOLING WIRING

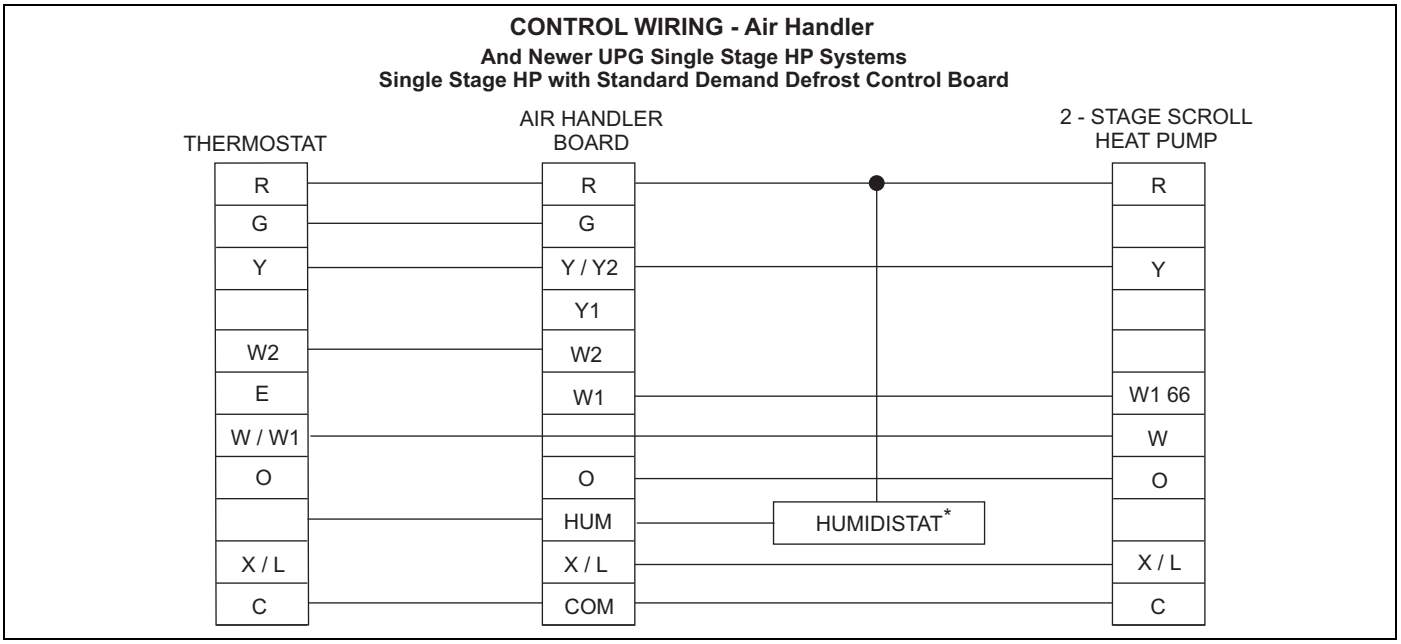

* Optional dehumidification humidistat switch contacts open on rise.

Notes:

1. "Y" Terminal on Air Handler Control Board must be connected for full CFM and applications requiring 60 second blower off delay for SEER enhancement.
2. Move HUM STAT Jumper on AH Control Board to YES/NO position.
3. MODE Jumper on AH control board should be set to HP for heat pumps.
4. To change quantity of heat during HP defrost cycle - Reverse connections at W1 & W2 on Air Handler Control Board.

TWO-STAGE COOLING WIRING

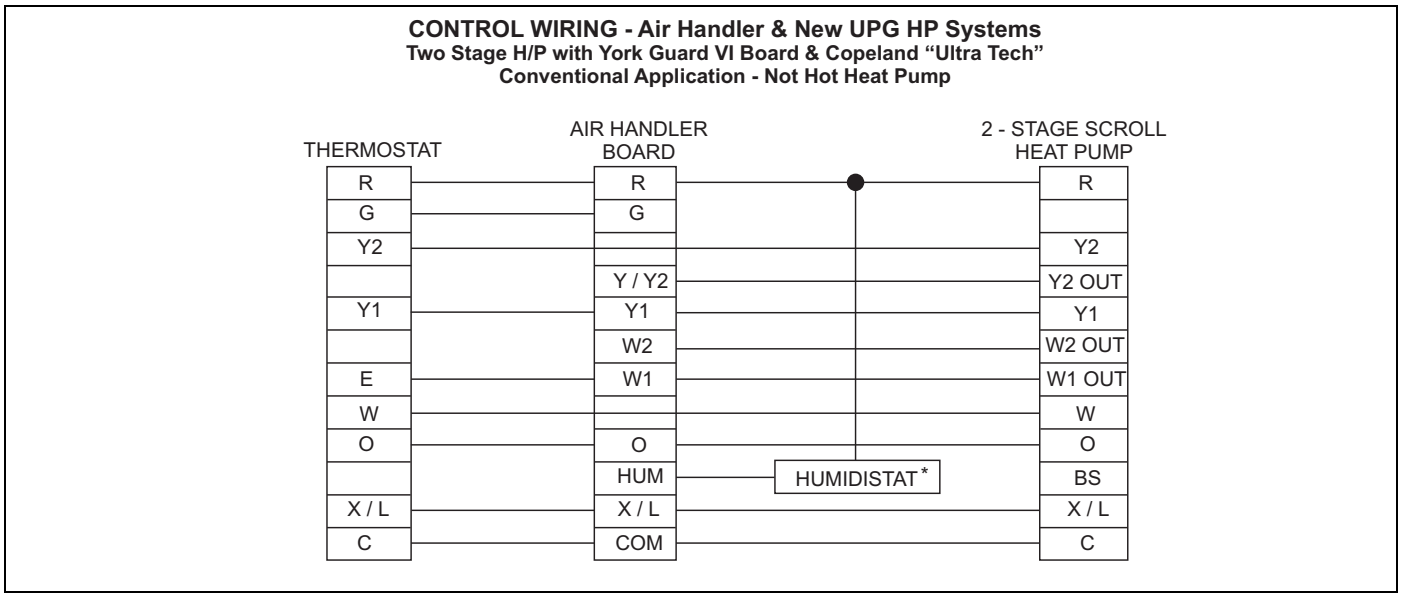

* Optional dehumidification humidistat switch contacts open on rise.

Notes:

1. "Y/Y2" Terminal on air handler control board must be connected for full CFM and applications requiring 60 second blower off delay for SEER enhancement.
2. Remove humidistat jumper on air handler control board.
3. For heat pump applications - set MODE jumper on air handler control board to the HP position.
4. To change quantity of heat during HP defrost cycle - reverse connections at W1 and W2 on air handler control board.

TYPICAL APPLICATION

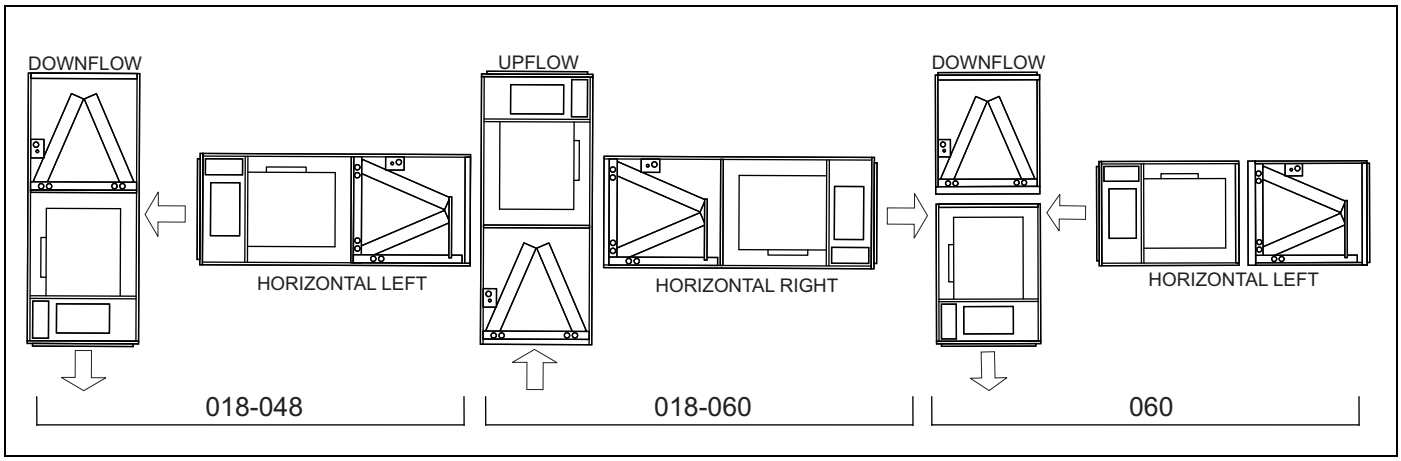

Subject to change without notice. Printed in U.S.A.
Copyright © 2009 by Johnson Controls, Inc. All rights reserved.

510625-YTG-A-0409
Supersedes: Nothing

Johnson Controls Unitary Products
5005 York Drive
Norman, OK 73069